NQTB-N Cam Bases for Quick Release Fasteners for Sheet Metal

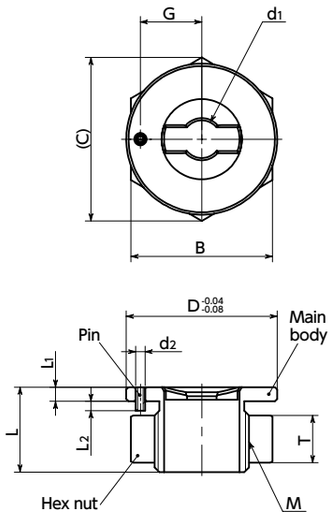

- Dedicated cam base for mounting Quick Clamp Fasteners **NQTS** **NQTS-NI** **NQTS-F** **NQTS-F-NI** to sheet metal.
- The clamp part is tapered, making it easy to insert the Quick Clamp Fastener clamp pin.

- Mounting

Align the phase of the Quick Clamp Fastener **NQTS** **NQTS-NI** **NQTS-F** **NQTS-F-NI** clamp pin and the **NQTB-N** pin mounting hole for mounting.
The **NQTB-N** pin mounting hole orientation is determined by the pin hole machining position in the mounting plate side.

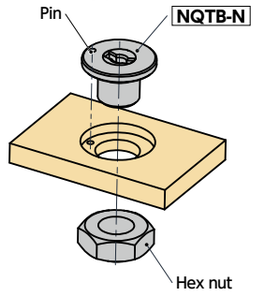

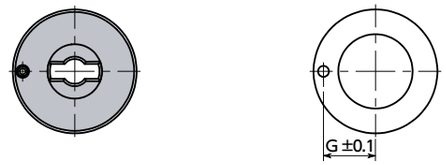

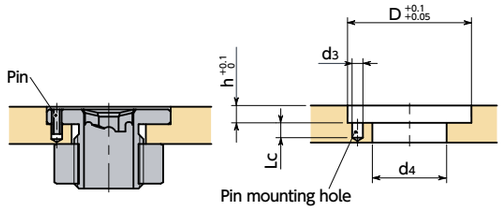

- Material/Finish

RoHS

	NQTB-N
Main Body	SCM440 Electroless Nickel Plating
Hex Nut	Equivalent to SUS304

Unit : mm

Part Number 1	D	L	M (Fine) Nominal of Thread	M (Fine) Pitch	L_1	d_1	d_2	G	L_2	B	T	C	Applicable Plate Thickness	Applicable Quick Clamp Fastener	Mass (g)
NQTB-5-N	25	16	M14	1.5	3	5	2	10.5	2	22	8	25.4	6～10	NQTS-5-BK NQTS-5-F-BK NQTS-5-NI NQTS-5-F-NI	37
NQTB-8-N	32	18	M20	1.5	3	8	2	13	2	30	10	34.6	6～12	NQTS-8-BK NQTS-8-L-BK NQTS-8-F-BK NQTS-8-NI NQTS-8-L-NI NQTS-8-F-NI	70

Unit : mm

Part Number	D	d_4	h	G	Lc	d_3
NQTB-5-N	25	15	3.5	10.5	3	2.2
NQTB-8-N	32	21	3.5	13	3	2.2

- Part Number Specification

NQTB-5-N

1

Cleanroom Wash & Packaging	Laser Marking
Not Available	Not Available

NBK https://www.nbk1560.com